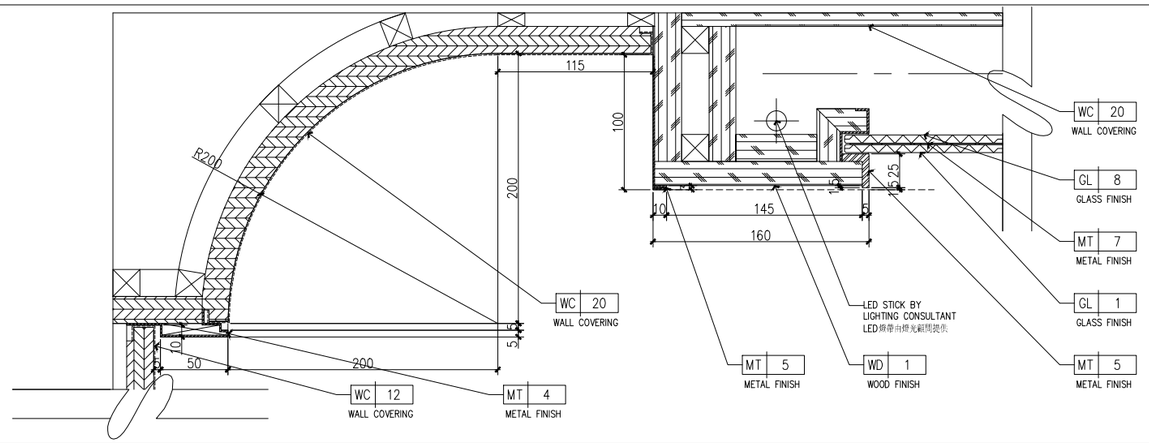

1 DETAIL
大樣圖 SCALE 1: 2

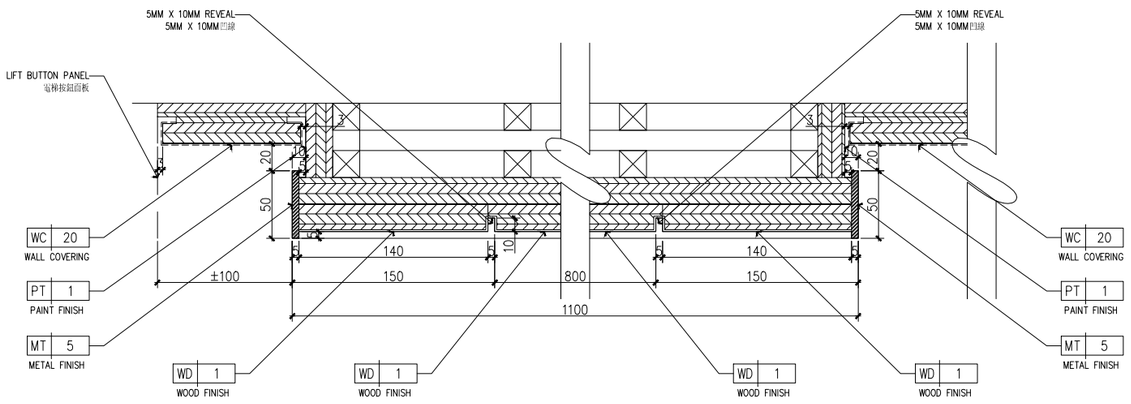

2 DETAIL
大樣圖 SCALE 1: 2

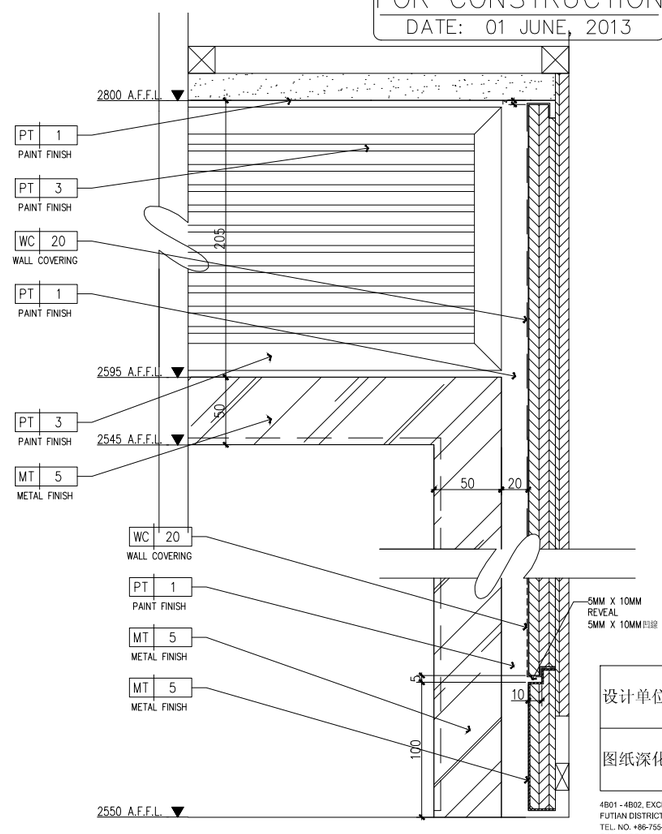

3 DETAIL
大樣圖 SCALE 1: 2

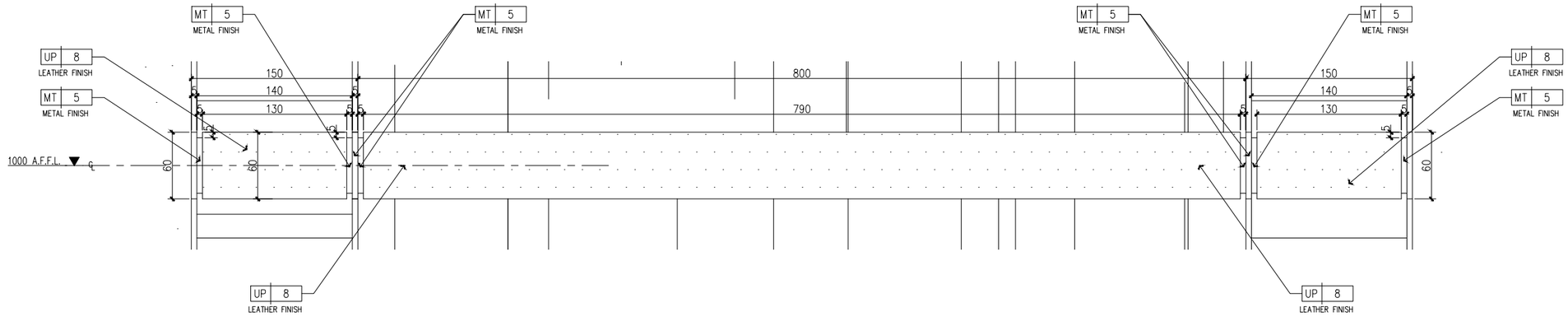

4 DETAIL
大樣圖 SCALE 1: 2

FOR CONSTRUCTION
DATE: 01 JUNE, 2013

漳州融信皇冠假日酒店
RONGXIN CROWNE PLAZA HOTEL
ZHANGZHOU, CHINA

设计单位 CCD 香港滕中設計事務所 CHENGCHENG DESIGN CO.,LTD.
图纸深化 YASHA 雅厦股份 浙江亚厦装饰股份有限公司
4B01 - 4B02, EXCELLENCE TIMES PLAZA, 4068 YITIAN ROAD
FUTIAN DISTRICT, SHENZHEN, CHINA
TEL. NO. +86-755-2399-4999 FAX. NO. +86-755-8384-9557
E-MAIL: DESIGN@CCD.COM.HK

DRAWING TITLE

PUBLIC AREA - 公共部份

LIFT CAB DETAIL - 電梯箱大樣圖

ALL DESIGNS AND SPECIFICATIONS ARE THE PROPERTY OF CHING CHING DESIGN (HK) LTD., AND CANNOT USED WITHOUT THEIR WRITTEN PERMISSION. THE SAME SHALL BE RETURNED UPON COMPLETION OF THE PROJECT. DO NOT SCALE DRAWINGS. ALL MEASUREMENTS MUST BE CHECKED ON SITE BY THE CONTRACTORS AND ANY DISCREPANCIES BROUGHT TO THE ATTENTION OF THE DESIGNER OR ARCHITECT. THIS DRAWING IS TO BE USED FOR THE PROJECT AND SITE IDENTIFIED AND NOT TO BE USED ON ANY OTHER PROJECT.

REVISION DATE

Scale 比例 AS SHOWN @ A1 Date 日期 10 APR, 2013
Designed BY 設計 Drawn BY 繪圖
Job No. 項目編號 APPROVED BY 核准
HK-1024
Sheet NO. 圖號

DT-1.30-02